SP, 2 INSULATED BOWLS AND MECHANICAL CONTROL

Ref: 562363
(SP2NB)

SP2 BASE STD 230/50 WHITE - GAS R290

General Features

SP is a compact countertop machine that dispenses cold creams, sorbets and other creamy specialties

SP2 has n. 2 I-Tank insulated bowls, each with a capacity of 5 litres, an elegant design and rounded shapes, stainless steel finishes and white or black plastics.

It works with water or milk-based powdered preparations or ready-made mixes in cartons to be poured directly into the bowls.

Tanks work independently.

Easy to use and clean, all parts that come in contact with the product can be disassembled without using any tools.

SP also offers a significant ROI due to its high overrun.

The R290 natural refrigerant gas and I-Tank insulated tank as standard.

Everything has been studied and designed to ensure easy and quick operations, high performances and the quality of the dispensed product: i.e. the new screw for adjusting product hardness, the hybrid consistency control and the sensor that control the temperature in the “defrost” mode, thus avoiding sudden fluctuations that would degrade the product and compromise the final result.

SP, 2 INSULATED BOWLS AND MECHANICAL CONTROL

Specifications

- Safety stop system.
- Tanks work independently.
- It is possible to customize the graphics on the front, on the lid and on the back (subject to negotiation).
- Hybrid control of consistency: to ensure the same consistency of the product, from the first to the last drop dispensed.
- Temperature control also in “defrost” mode: thus avoiding sudden fluctuations that would degrade the product and compromise the final result.

Construction

- The patented I-Tank insulated bowl reduces the impact of ambient temperature on the product, improving its cooling efficiency and guaranteeing energy and cost savings.
- Dispenser for cold creams, sherbets, slushies, and other cold creamy specialties.
- New screw user-friendly for adjusting product hardness
- R290 natural refrigerant gas as standard.
- n. 2 I-Tank insulated bowls containing 5-litres of finished product each.

SP, 2 INSULATED BOWLS AND MECHANICAL CONTROL

Electric

Supply voltage:	220-240 V / 1 ph / 50 Hz
Electrical power max.:	0.765 kW
Current consumption:	4.2 Amps
Plug type:	CE-SCHUKO

Key Information:

Number of bowls:	2
Bowl's capacity:	5 lt
Control board:	
Dimensions, Width:	447 mm
Dimensions, Depth:	442 mm
Dimensions, Height:	613 mm
Net weight:	48 kg
Cooling system:	AIR

Refrigeration Data

Refrigerant gas:	R290

Certifications

The company reserves the right to make modifications to the products without prior notice. All information correct at time of printing.

2024.10.08

Front

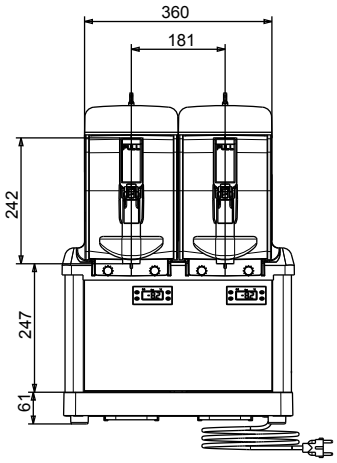

Side

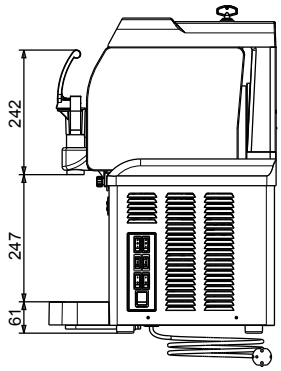

Top

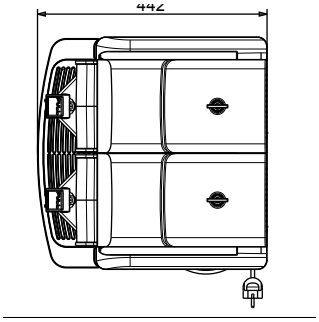

www.spm.drink-systems.com
infospm@electroluxprofessional.com